WISE Pacific

Instructions for Use

06/05/2026
Art. 942428104

Content

Key to symbols 1

Application area 2

General 2
Contents 2
Protective equipment 2
Electrical safety 2
Handling 2
Installation 2

Dimensions and weight 3

Weight 4

Installation 5

Air 7
Water 8
Water quality 8

Connection 9

LED - Explanation 9
Use 10
Trouble shooting 10
Cleaning 10
Service/maintenance 10
Materials and surface treatment 10
Disposal 10
Product warranty 10
Technical data 11
Electrical data 11
References 11

Declaration of Conformity 11

Recommendation for electrical installations .. 12

Description of problem: 12
How is the voltage drop in the cable calculated: 12

Commissioning 13

ADC 13
K-factor setting 14
Control measurement of Air flow 14

Maintenance 15

The document refers to version "d"

Key to symbols

Symbols on the machine

This product complies with applicable EU directives

Symbols in these Instructions for Use

Warning/Caution!

The document was originally written in Swedish

Application area

The product is a chilled beam with integrated radio transmitter designed for demand-controlled climate indoors within Swegon's ventilation system WISE. The product is used to ventilate, cool and heat premises exactly as needed.

The product may not be used for anything other than its intended use.

General

Read through the entire instructions for use before you install/use the product and save the instructions for future reference. It is not permissible to make changes or modify this product other than those specified in this document.

Contents

1 WISE Pacific

1 x Instructions for use

Protective equipment

Always use appropriate personal protective equipment for the work in question, in the form of gloves, respirators, protective glasses and helmets during handling, installation, cleaning and service/maintenance.

Electrical safety

Permitted voltage, see Electrical data.

It is not permissible to insert foreign objects into the product's contactor connections or ventilation openings; risk for short circuiting.

24 V isolation transformer to be connected should comply with the provisions of IEC 61558-1.

Cable sizing must be carried out for cabling between the product and the power supply source.

Disconnect the power supply when working on products that are not required to run.

Always follow the local/national rules for who shall be permitted to carry out this type of electrical installation.

Handling

Always use appropriate transport and lifting devices when the product is to be handled to reduce ergonomic loads.

The product must be handled with care.

Installation

- Moist, cold and aggressive environments must be avoided.
- Assemble the product according to this instruction and applicable industry regulations.
- Install the product for easy access during service/ maintenance.
- Avoid installing the product near a heat source.
- Check to make sure that the product does not have any visible defects.
- Check that the product is properly secured after it has been installed.
- Secure cables with cable ties.
- Check that all cables are properly secured in place after installation.

Dimensions and weight

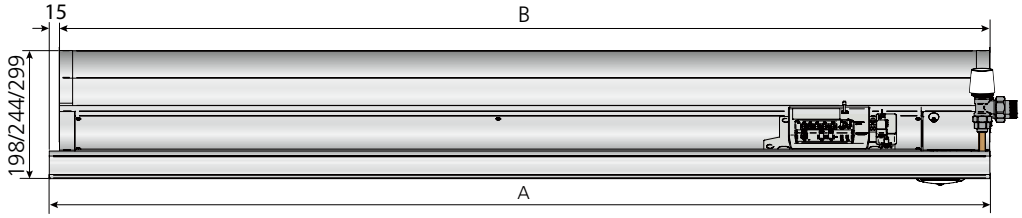

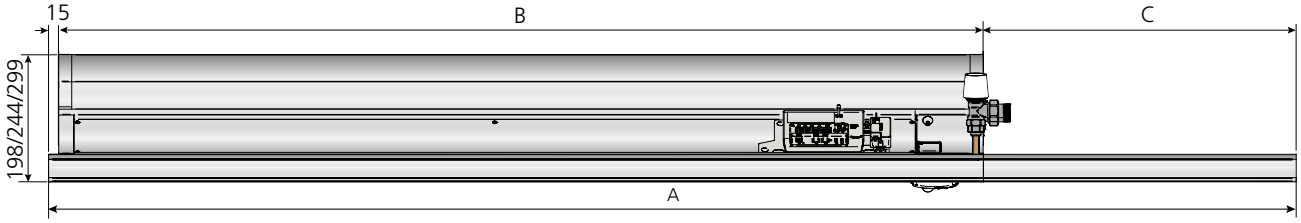

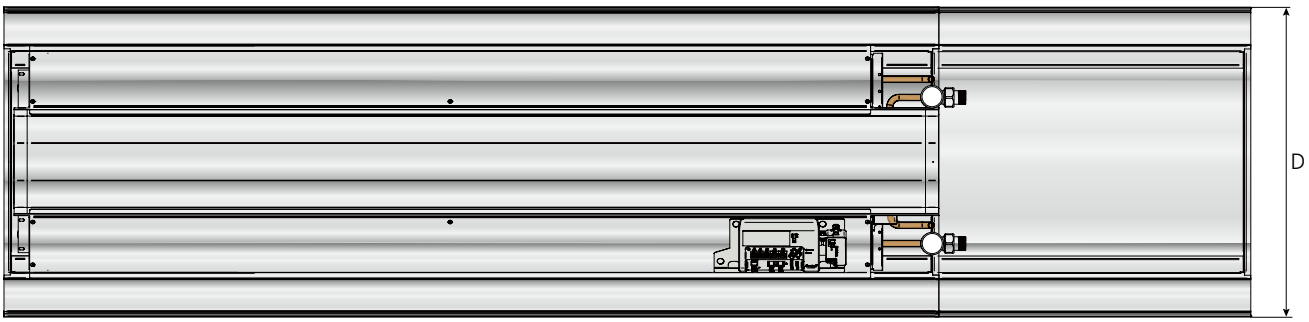

For design module in T-bar with 600 mm centre-to-centre

A	B	C	D
1194; 1715; 1794	1170	(1194)=24; (1715)=545; (1794)=624	594
1794; 2394	1770	(1794)=24; (2394)=624	594
2394; 2994	2370	(2394)=24; (2994)=624	594
2994	2970	(2994)=24	594

For design module in T-bar with 625 mm centre-to-centre

A	B	C	D
1242; 1867	1170	(1242)=72; (1867)=697	617
1867; 2492	1770	(1867)=97; (2492)=722	617
2492	2370	(2492)=122	617

For design module in T-bar with 675 mm centre-to-centre

A	B	C	D
1342; 2017	1170	(1342)=172; (2017)=847	667
2017; 2692	1770	(2017)=247; (2692)=922	667
2692	2370	(2692)=322	667

For design module in Clip-in ceiling and sheet metal ceiling coffers

A	B	C	D
1198; 1498; 1698; 1715; 1798	1170	(1198)=28; (1498)=328; (1698)=528; (1715)=545; (1798)=628	598
1798; 2398	1770	(1798)=28; (2398)=628	598
2398; 2998	2370	(2398)=28; (2998)=628	598
2998	2970	(2998)=28	598

Weight

Air module

Length	Air connection	Weight
(mm)	ø	(kg)
1170	125	6,38
1170	160	6,94
1170	200	7,66
1770	125	9,63
1770	160	10,36
1770	200	11,46
2370	125	12,74
2370	160	13,75
2370	200	15,11
2970	125	15,8
2970	160	17,03
2970	200	18,71

Capacity module

Length	Water volume (l)		Dry weight
(mm)	cooling circuit	heating circuit	(kg)
1000	0,97	0,26	3,41
1000 NPT	0,97	0,26	3,79
1600	1,52	0,40	5,02
1600 NPT	1,52	0,40	5,4
2200	2,09	0,53	7,06
2200 NPT	2,09	0,53	7,44
2800	2,63	0,67	8,63
2800 NPT	2,63	0,67	9,01

Design module

Length	Width	Weight
(mm)	(mm)	(kg)
1194	594	5,35
1794	594	7,65
2394	594	9,96
2994	594	12,27
1198	598	5,39
1798	598	7,72
2398	598	10,04
2998	598	12,36
1213	603	5,49
1823	603	7,87
2433	603	10,25
3043	603	12,63
1242	617	5,72
1867	617	8,21
2492	617	10,71
1342	667	6,55
2017	667	9,46
2692	667	12,38

Installation

WISE Pacific

WISE Pacific with SA/EA module

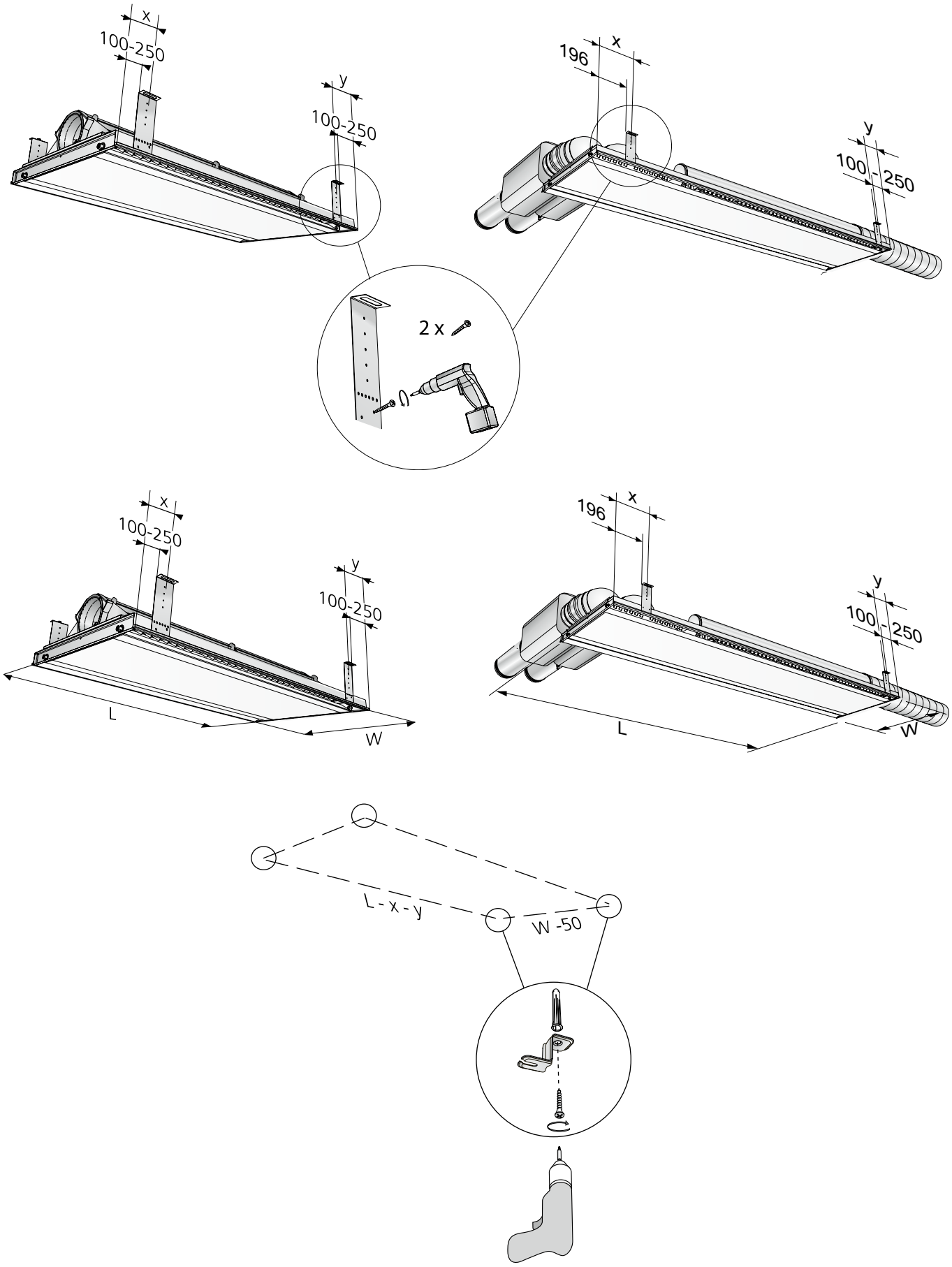

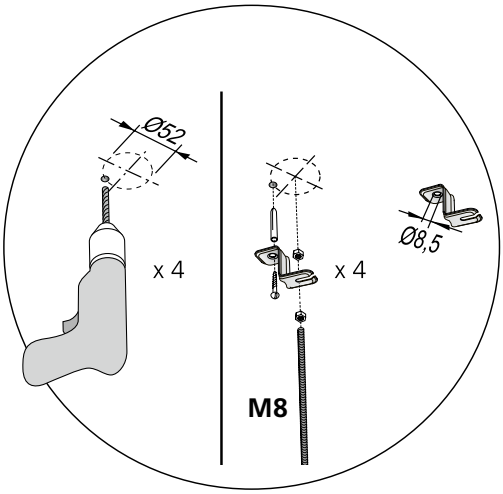

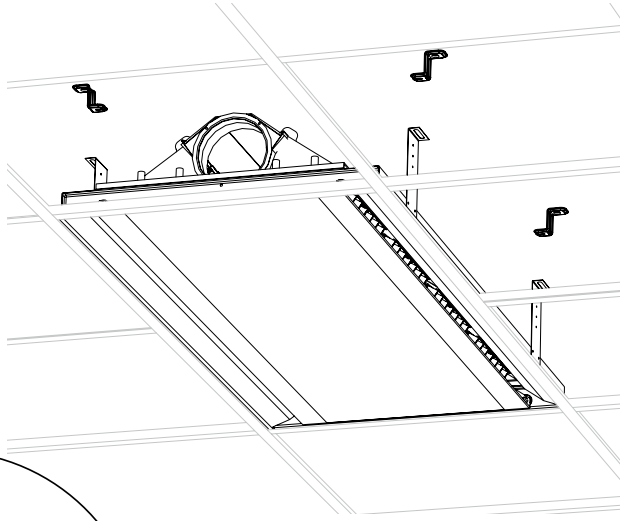

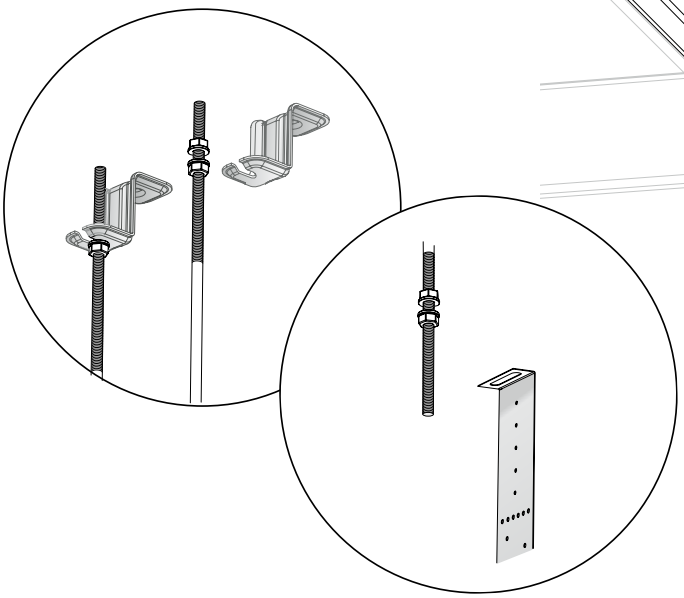

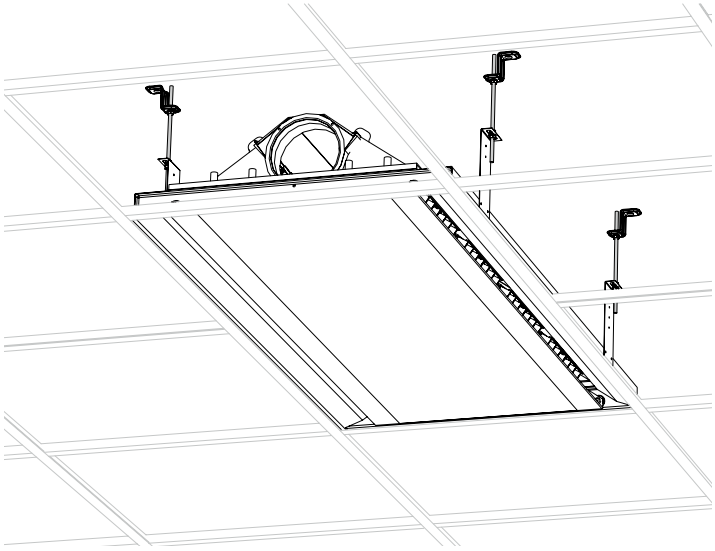

Swegon reserves the right to alter specifications.

Air

WISE Pacific

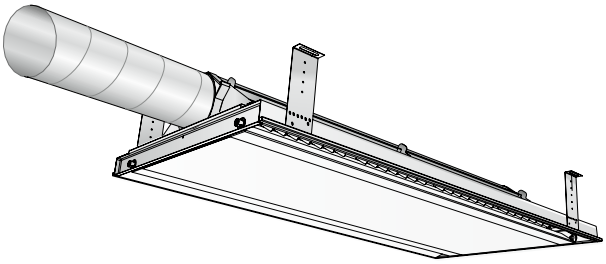

WISE Pacific with SA/EA module

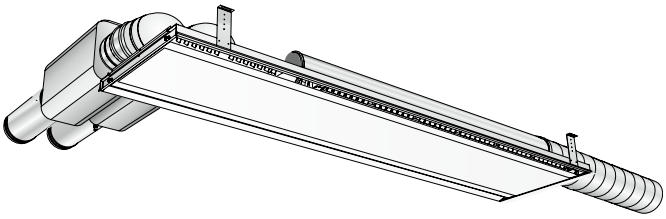

Connection dimensions - WISE Pacific

Unit *	Air connection, diameter
(mm)	Ø
1200, 1800, 2400, 3000	125, 160, 200

** Nominal length*

Connection dimensions - SA/EA module

Air connection, diameter
Ø
160

Water

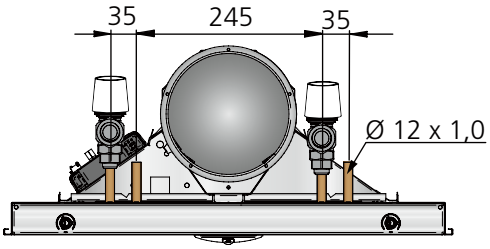

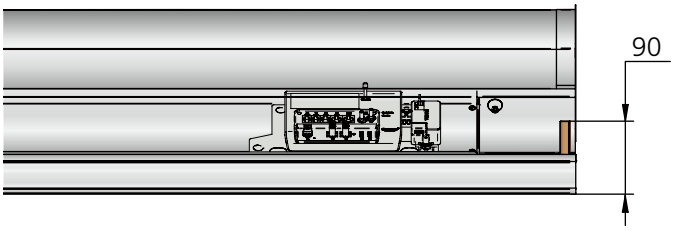

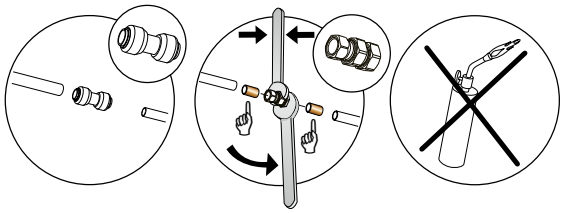

N.B!
Use support sleeves inside the pipes together with compression ring couplings.

Max. recommended operating pressure: 1600 kPa
Max. permissible inlet flow temperature: 60°C

A2	B1	B2	A1
Kyla retur/ Cooling return	Värme tillopp/ Heating supply	Värme retur/ Heating return	Kyla tillopp/ Cooling supply

Water quality

Swegon recommends water quality according to VDI 2035-2 for both the heating and cooling systems. In order to maintain the oxygen content in the water below the levels (<0.1 mg/l) prescribed in VDI 2035-2, it is recommended to install a vacuum degasser, particularly in the cooling system where it's more challenging to dissolved gas. It is also important that the prepressure in the expansion vessel is dimensioned according to EN-12828 for both the heating and cooling systems and that regular checks are made of the pre-pressure. The cooling and heating systems must be designed to prevent oxygen from entering the system, this is particularly important to consider when selecting flex hose, pipes and expansion vessels. When the system is filled with fresh water, it has an oxygen content of approximately 8 mg/l, however, this oxygen is consumed quickly through corrosion processes and within a few days the oxygen in the water should be consumed. Nevertheless, it is important to avoid filling the system with fresh water unnecessarily.

Automatic deaerators are often installed to facilitate filling of the system. It is recommended that the automatic deaerators are turned off once the system has been fully vented to avoid these drawing in air in the system if the pre-pressure in the expansion vessel should drop.

Connection sizes

	Length *	Factory-fitted	Connection	Coupling type	Connection	Coupling type
Cooling only	1200, 1800	Actuator and valve	Return	DN15, male thread	Supply pipe	Plain pipe 12 x 1.0 mm
Cooling/heating	1200, 1800	Actuator and valve	Return	DN15, male thread	Supply pipe	Plain pipe 12 x 1.0 mm
Cooling only	2400, 3000	Actuator and valve	Return	DN20 external threads	Supply pipe	Plain pipe 12 x 1.0 mm
Cooling/ heating	2400, 3000	Actuator and valve	Return	DN20 external threads DN15 external threads	Supply pipe	Plain pipe 12 x 1.0 mm Plain pipe 12 x 1.0 mm
Cooling only	1200, 1800	-	Return	Plain pipe 12 x 1.0 mm	Supply pipe	Plain pipe 12 x 1.0 mm
Cooling/heating	1200, 1800	-	Return	Plain pipe 12 x 1.0 mm	Supply pipe	Plain pipe 12 x 1.0 mm
Cooling only	2400, 3000	-	Return	Plain pipe 12 x 1.0 mm	Supply pipe	Plain pipe 12 x 1.0 mm
Cooling/heating	2400, 3000	-	Return	Plain pipe 12 x 1.0 mm	Supply pipe	Plain pipe 12 x 1.0 mm

**= Nominal length*

Connection

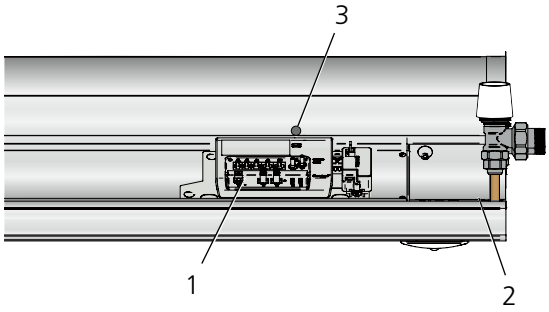

WISE Pacific with factory-fitted components

1. WISE CU (Controller Unit)
2. Motor for integrated air damper
3. Sensor for measuring supply air temperature

Factory fitted components as an option

- Sensor Module Advanced (WISE SMA Multi), (Optional)
- Sensor Module Basic (WISE SMB), (Optional)
- Valves and actuators for cooling
- Valves and actuators for heating
- Temp. sensor
- Condensation sensor

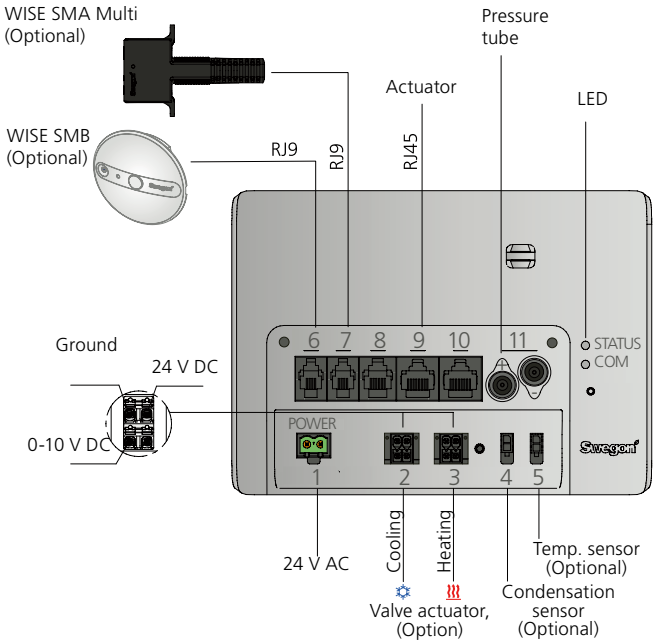

WISE Pacific, connection.

LED - Explanation

Not connected "paired"

	Colour	Type
Energized	White	Permanent
Selected in TuneWISE	White	Flashing, fast
Prepared to be added to the system	White	Flashing, slowly
To be added to the system	White	Flashing, fast for 5 s

Connected "paired"

	Colour	Type
Normal operation	Green	Permanent
Restart	Blue	Permanent for 10 s
Initiation	Blue	Flashing
Boosted max. flow	Orange	Permanent
Boosted min. flow	Orange	Permanent
Boosted water flow	Violet	Permanent
Boosted water flow/air flow	Violet/Orange	Alternating
Comfort alarm	Red	Permanent
Function alarm	Red	Flashing
Emergency mode	Green/Red	Alternating
Test mode	Green/Orange	Alternating

There are different types of actuators

- For connection of the thermal actuator such as Swegon's actuator ACTUATORc, see figure a.
- When connecting the relay for connection of three or more actuators, see figure b.
- When connecting of the actuator with 0-10 V control signal (NOTE! 24 V DC supply) see figure c.

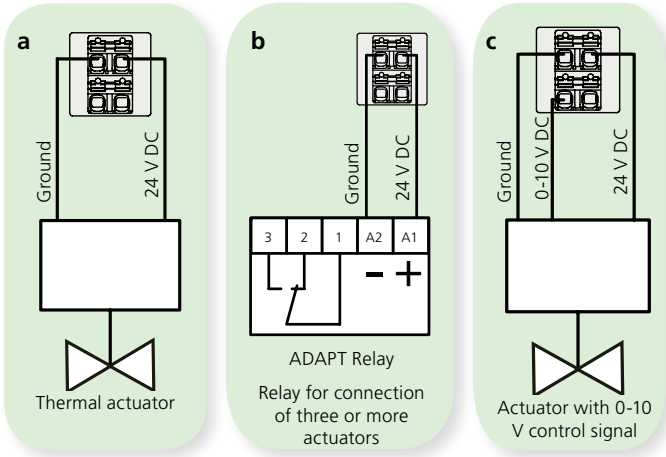

Use

Use TuneWISE for commissioning. Commissioning must be performed by qualified and trained WISE service engineers.

Use SuperWISE for settings, reading alarms, etc. refer to the documentation for SuperWISE II / SuperWISE II SC.

Trouble shooting

The product is not shown in the system:

- Make sure that the product is energized. (e.g. diode)
- Make sure that the product is paired.
- Make sure the product is in the right network.

The product shows incorrect/no air flow/pressure

- Make sure that the product is installed according to the recommended distance.
- Check that there is air flow/pressure.
- Check that the measuring tube is mounted correctly.
- Check that the measuring tube is undamaged.

The product does not regulate the air flow/pressure

- Check that the actuator has supply power
- Check that the actuator is properly mounted on the regulation shaft.

The product shows incorrect/no temperature

- Make sure the temperature sensor is not missing.
- Make sure that the temperature sensor does not hang outside the product.
- Check that the temperature sensor is connected to the right input.

The product shows incorrect/no VOC/CO2

- Make sure the VOC/CO2 sensor (WISE SMA Multi) is not missing.
- Check that the VOC/CO2 sensor is connected to the right input.

Cleaning

Ideally the product should be cleaned twice a year by vacuuming the coil to remove loose dust. In fibre dense environments a more frequent interval is recommended.

A simple visual inspection of connections is recommended when cleaning.

Avoid aggressive cleaning agents which may harm painted surfaces. Normally a mild soap or alcohol solution is fully adequate for cleaning. See also the maintenance section in this instructions for use.

Cleaning of electrical components

- If needed, use a dry cloth to clean the components.
- Never use water, detergent and cleaning solvent or a vacuum cleaner.

Service/maintenance

- In connection with a service, mandatory ventilation inspection or cleaning of the ventilation system, check that the general condition of the products looks ok. Pay particular attention to the suspension, cables and that they sit firmly in place.
- It is not permissible to open or repair electrical components.
- If you suspect that the product or a component is defective, please contact Swegon.
- A defective product or component must be replaced by an original spare part from Swegon.

Materials and surface treatment

Sheet parts are made of galvanised sheet steel (Z275) and pre-painted sheet SS-EN 10143+10346 - DX52D + ZA95, NCS S 0500-N gloss 30+/-6%.

Disposal

Waste must be handled according to local regulations.

Product warranty

The product warranty or service agreement will not be in effect/will not be extended if: (1) The product is repaired, modified or changed, unless such repair, modification or change has been approved by Swegon AB; or (2) the serial number on the product has been made illegible or is missing.

Technical data

Max. radio frequency output:	50 mW
Frequency band:	2.45 GHz, IMS band (2400--2483 MHz)
Temperature sensor:	0 - 50°C ± -0.5°C
Dynamic pressure sensor:	0 - 300 Pa
With WISE SMA Multi	
VOC sensor	450 - 2000 ppm
RH sensor:	0 - 100 RH%
CO2 sensor:	400 - 2000 ppm
IP class:	IP20
Running time open/close (90°):	120 s
Ambient temperature	
Operation:	0 – 50°C
Storage:	-20 – +50°C
RH:	10 - 95% (non condensing)
CE marking:	2006/42/EC (MD)
	2014/53/EU (RED)
	2011/65/EU (RoHS2)

Electrical data

Power supply:	24V AC ±15% 50 - 60Hz
Connections pipe dim.	
Power:	Screw terminal max. 2.5mm²
Valve actuator:	Push-in spring force connections, max. 1.5 mm²
Max. power consumption:	See table below

WISE Pacific in standard design:	VA / unit	Standard VA total
WISE CU	2.3	5.4
Damper motor	3.1	

Option:	VA / unit		
Valve actuator, ACTUATORc	x 1	x 2	x 3
	6	12	18*
WISE SMA Multi	0.8		
WISE SMB	0.6		

Example:
WISE Pacific in standard design with the following options:
Actuator for cooling and heating as well as WISE SMA Multi, gives a total power consumption of 5.4 + 6 + 0.8 = 12.2 VA

References

www.swegon.com

Building Materials Declaration

WISE Pacific product data sheet

WISE System Guide

SuperWISE II / SuperWISE II SC User Manual

WISE Project Planning Guide - Heating, Cooling & Ventilation and Electricity & Control

Declaration of Conformity

Swegon AB hereby affirms that

WISE Pacific with integrated radio, complies with the essential characteristic demands and relevant regulations specified in the following directives: 2006/42/EC (MD), 2014/53/EU (RED) and 2011/65/EU (RoHS2):

The following standards have been observed:

EN ISO 12100:2010	Safety of machinery - General principles for design - Risk assessment and risk mitigation
EN 60204-1:2018	Safety of machinery - Electrical equipment of machines - Part 1: Generic standards
EN 60730-1:2016 A1:2019	Automatic electrical control and control unit for household use - Part 1: Generic standards
EN 60730-2-14:2019	Automatic electrical controls for household and similar use - Part 2 Particular requirements for electric actuators
IEC 60529:1992+A2:2013	Degrees of protection provided by enclosures (IP code)
EN 61000-6-2:2019	Electromagnetic compatibility (EMC). Generic standards. Immunity for industrial environments
EN 61000-6-3:2021	Electromagnetic compatibility (EMC) - Generic standards - Emission standard for residential, commercial and light-industrial environments
EN 300 328 V2.2.2	Electromagnetic compatibility and Radio spectrum Matters (ERM) - Wideband Transmission systems - Data transmission equipment operating in the 2.4 GHz ISM band and using spread spectrum modulation techniques
EN 60335-1:2023 EN 60335-2-30:2024 EN 62233:2008	Electric household appliances and similar appliances - Safety - Part 1: Generic standards

CE

Person responsible for this declaration:

Name: Per Eriksson, R&D Director Room Units

Address: Friskyttevägen, 671 34 Arvika, Sweden

Date: Arvika 06/05/2026

This declaration is applicable only if the product has been installed according to the instructions in this document and if no modifications or changes have been made on this product.

Recommendation for electrical installations

- Swegon recommends that all electrical installations are carried out by a qualified electrician.
- Swegon recommends that a 24 V power supply is connected with a 1.5 mm² copper cable to minimise the risk of voltage drops in the case of long cable runs.
- Swegon recommends the use of Swegon-marked transformers for supplying power to Swegon's products

Voltage drop table at different loads (amperes) with a 1.5 mm² cable

Metres	Current/Amperes					
(m)	1	2	3	4	5	6
10	0.24	0.48	0.72	0.96	1.20	1.44
20	0.48	0.96	1.44	1.91	2.39	2.87
30	0.72	1.44	2.15	2.87	3.59	4.31
40	0.96	1.91	2.87	3.83	4.78	5.74
50	1.20	2.39	3.59	4.78	5.98	7.18
60	1.44	2.87	4.31	5.74	7.18	8.61
70	1.67	3.35	5.02	6.70	8.37	10.05
80	1.91	3.83	5.74	7.65	9.57	11.48
150	3.59	7.18	10.76	14.35	17.94	21.53
160	3.83	7.65	11.48	15.31	19.13	22.96

The largest permitted voltage drop is 3.6 V

Description of problem:

Swegon's electrical units and machines are designed to work within specific voltage intervals. If the voltage drops below the nominal value, this can lead to impaired performance or even damage to the equipment.

Voltage drops also entail increased resistance in cables and components, which generates heat. This heat represents a loss of electrical energy. Depending on the voltage drop, the energy losses can be significant.

A general guideline for a 24 V system is that a 15% voltage drop is acceptable (3.6 volts).

How is the voltage drop in the cable calculated:

Resistance (R) = (Resistivity (p) x Length (L)) / Area (a).

Voltage drop in wire (UL) = Resistance (R) x current (I)

$$R_1 = \frac{p \cdot L}{a}$$

$$R_2 = \frac{p \cdot L}{a}$$

$$R = R_1 + R_2$$

$$UL = R \cdot I$$

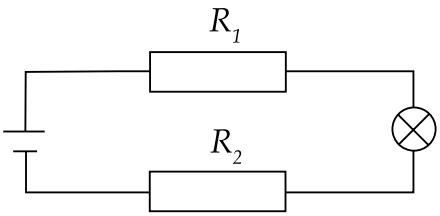

For example, the resistivity for copper is 0.0175 ohm mm²/m at 15°C. Bear in mind that the resistance increases by 0.4% per degree Celsius.

Examples of voltage drops in cables:

Input data	value	Unit
Supply voltage	24	Volts
Current (load)	1.25	Amperes
Cable area	1.5	mm
Cable length (phase + neutral wire)	50	M

Voltage drop	1.5	Volts

Example 1 at 22°C

Input data	value	Unit
Supply voltage	24	Volts
Current (load)	1.25	Amperes
Cable area	1.5	mm
Cable length (phase + neutral wire)	200	M

Voltage drop	6	Volts

Example 2 at 22°C

Swegon reserves the right to alter specifications.

Commissioning

ADC

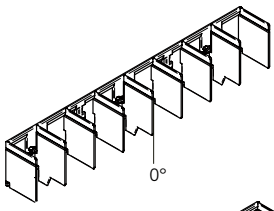

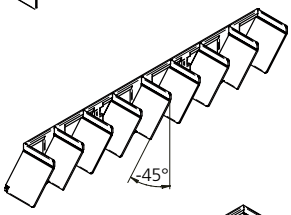

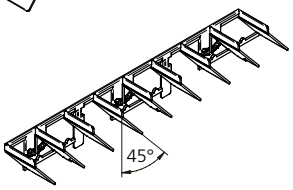

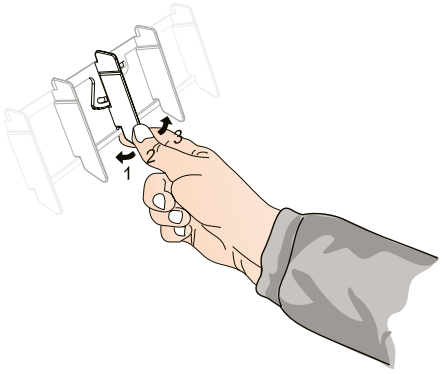

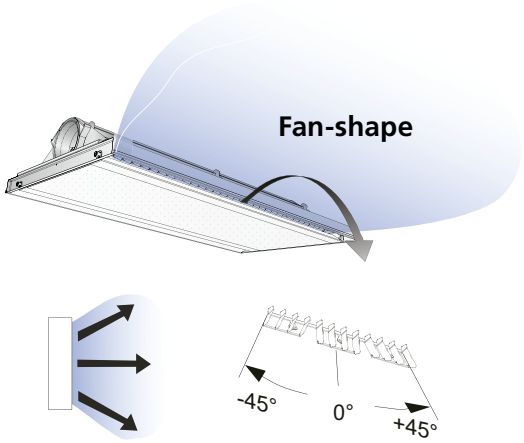

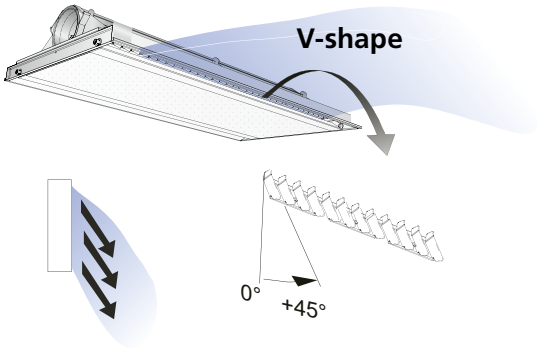

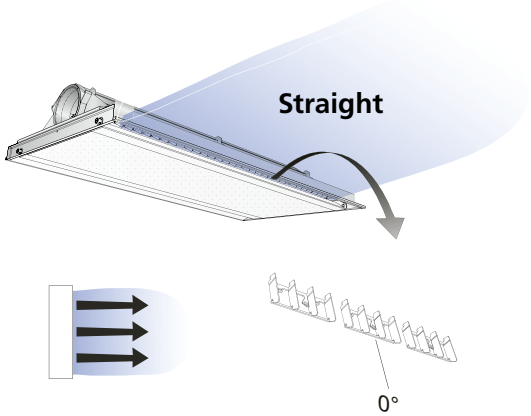

K-factor setting

WISE Pacific continuously regulates the k-factor to ensure the required airflow is maintained. The active k-factor setpoint can be found on the k-faktor label mounted at the actuator.

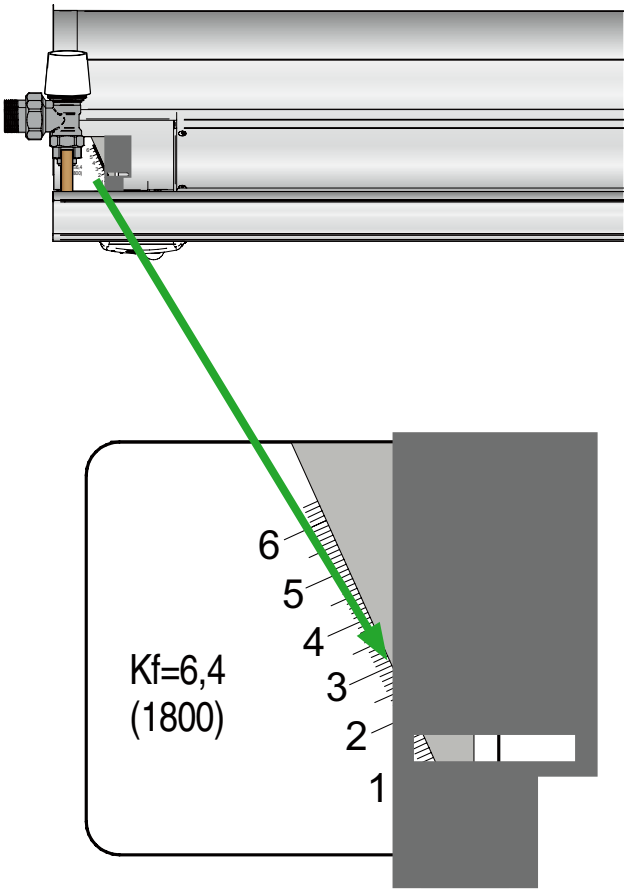

Example showing the K-factor is 3.

Control measurement of Air flow

Step 1
Allow the system to stabilize.
It is recommended to set the system to balancing mode and wait until the products have stabilized and the expected airflow is reported.

Step 2
Disconnect the RJ45 cable from the motor control board to prevent the product from adjusting itself during the control measurement.

Step 3
Disconnect the pressure tubes from the nipples and connect the measuring instrument to measure the duct pressure.

Step 4
Fold down the face plate and read the product's current K-factor by checking the K-factor scale against the control plate.

In the example image, the K-factor is 3.

Step 5
Use the measured pressure and the current K-factor to calculate the airflow (l/s) using the formula:

$$q = k \cdot \sqrt{p}$$
$$q = 3 \cdot \sqrt{100}$$
$$q = 30\ l/s$$

Maintenance

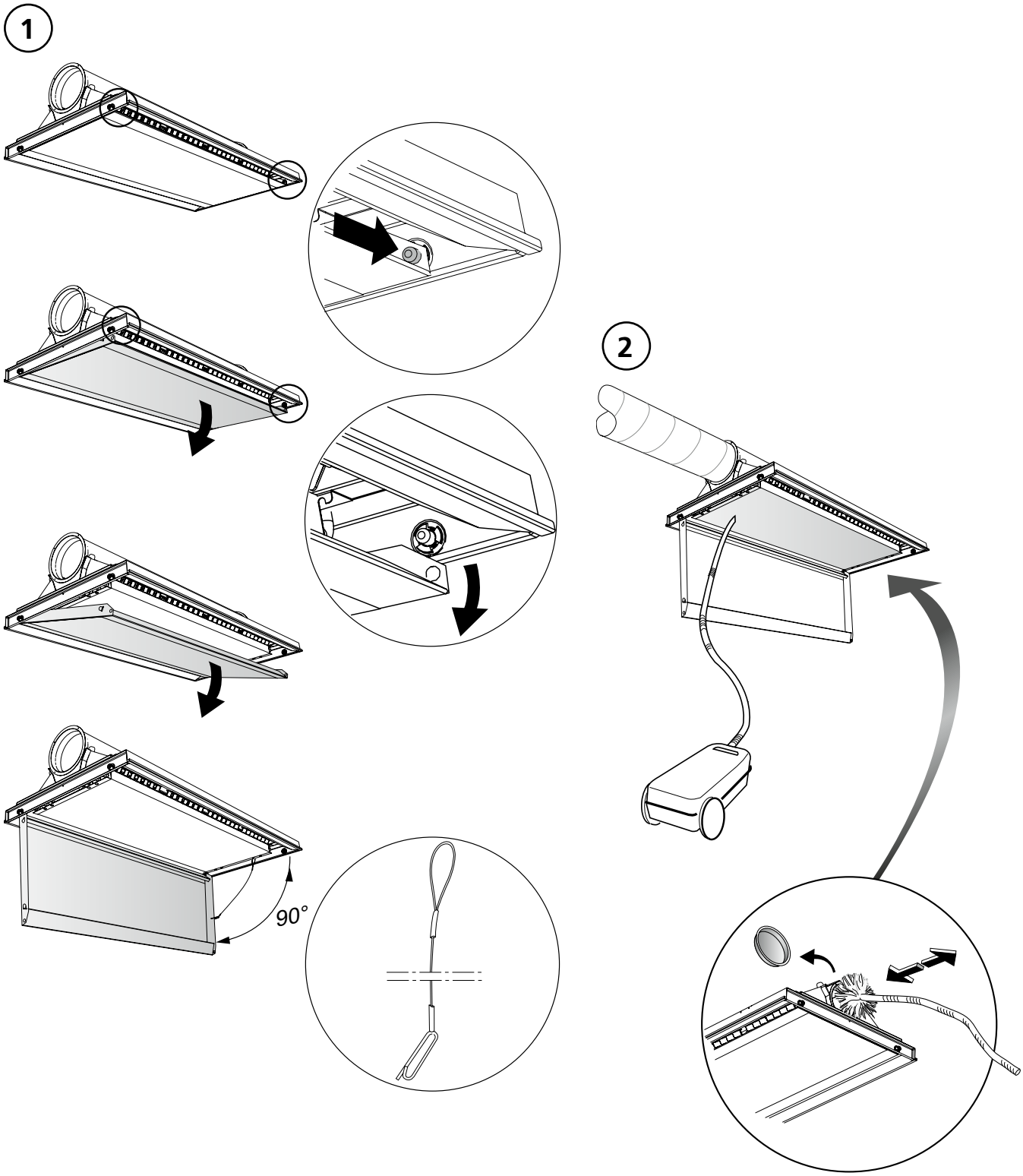

3

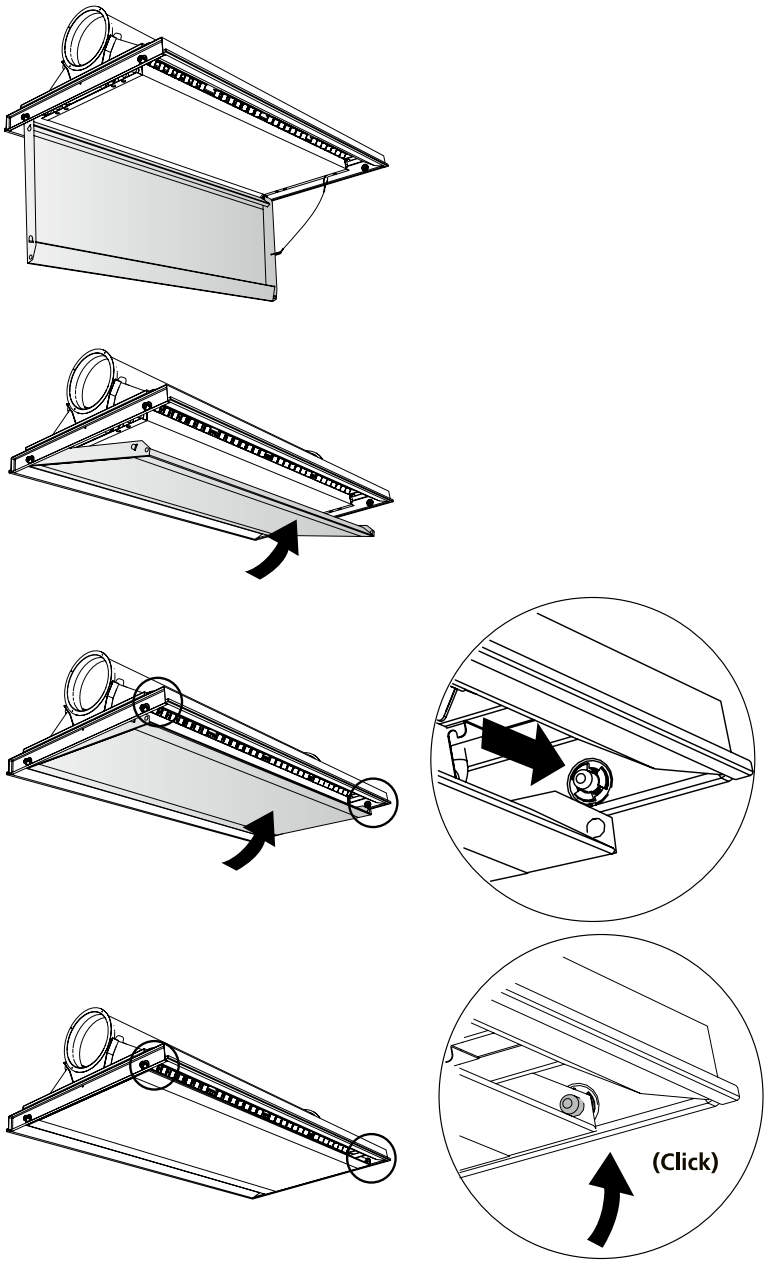

Swegon reserves the right to alter specifications.